ECO NO.	DATE	REV.	REVISION RECORD	AUTH.	DR. BY
2083	1/27/93	A	ADDED RELAY TO THE CONTROL BOX: WIRING RAN FROM TB1-3 TO EXHAUST TEMP. SWITCH TO O.P. SWITCH TO WATER TEMP. SWITCH. ROW FROM TB1-3 TO O.P. SWITCH TO EXHAUST TEMP. SWITCH TO WATER TEMP. SWITCH		WRM
2193	6/14/93	B	TERMINAL BLOCKS TB1 AND TB2 WERE 5 POSITION BLOCKS, NOW 10 POSITION BLOCKS		WRM
2716	4/11/95	C	O.P. SW. WAS CLOSED; EX. TEMP SW. WAS OPEN		MKM
3081	10/9/96	D	CHANGE ALT. GROUND WIRE FROM GRN TO BLK		BRN
4664	8/3/00	E	ADDED RELAY K2, REWIRE 10A C.B.; ADDED CONNECTION TO GOVERNOR FROM FUEL PUMP. ADDED TRANSIENT SUPPRESSOR TO CIRCUIT.		TSM

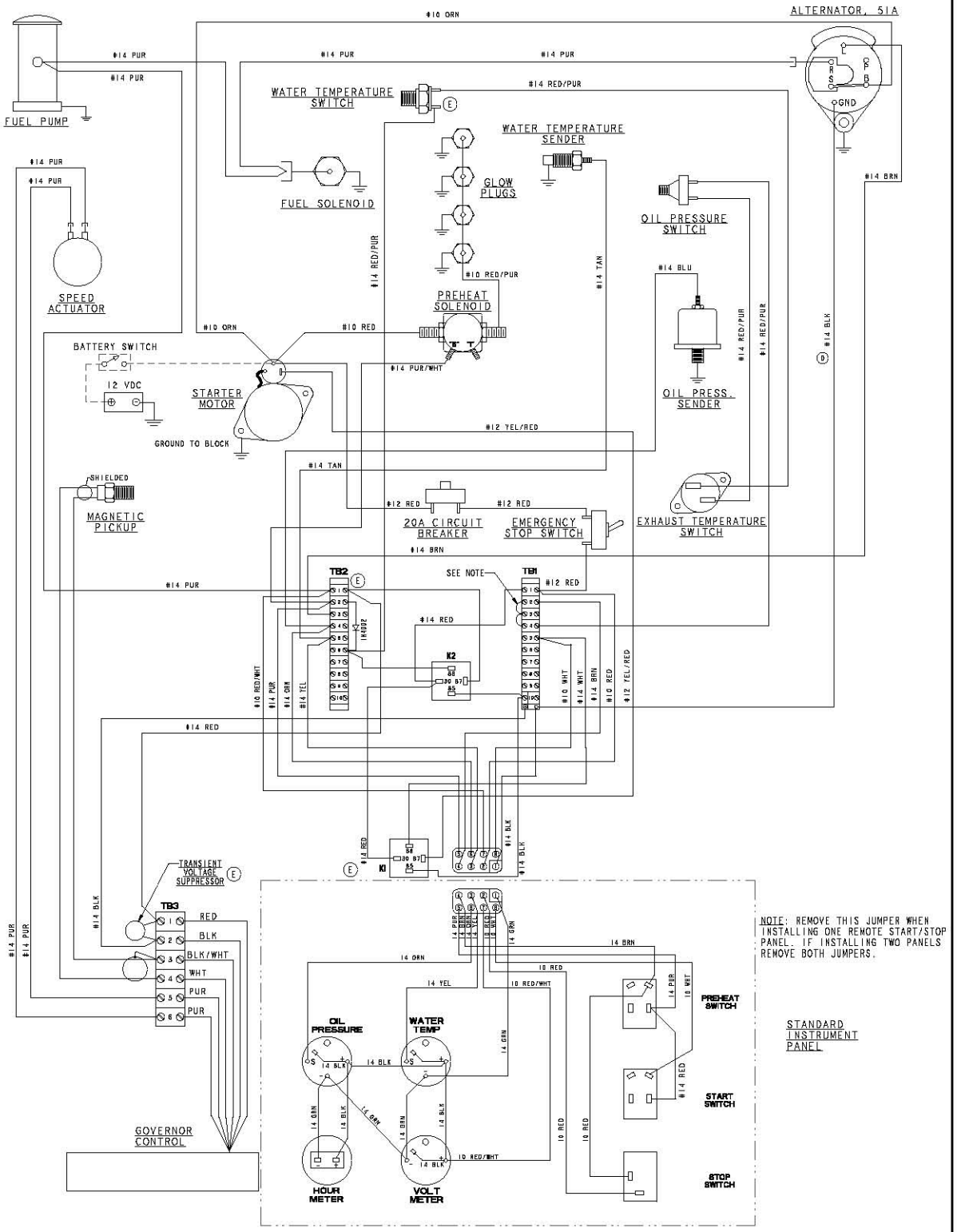

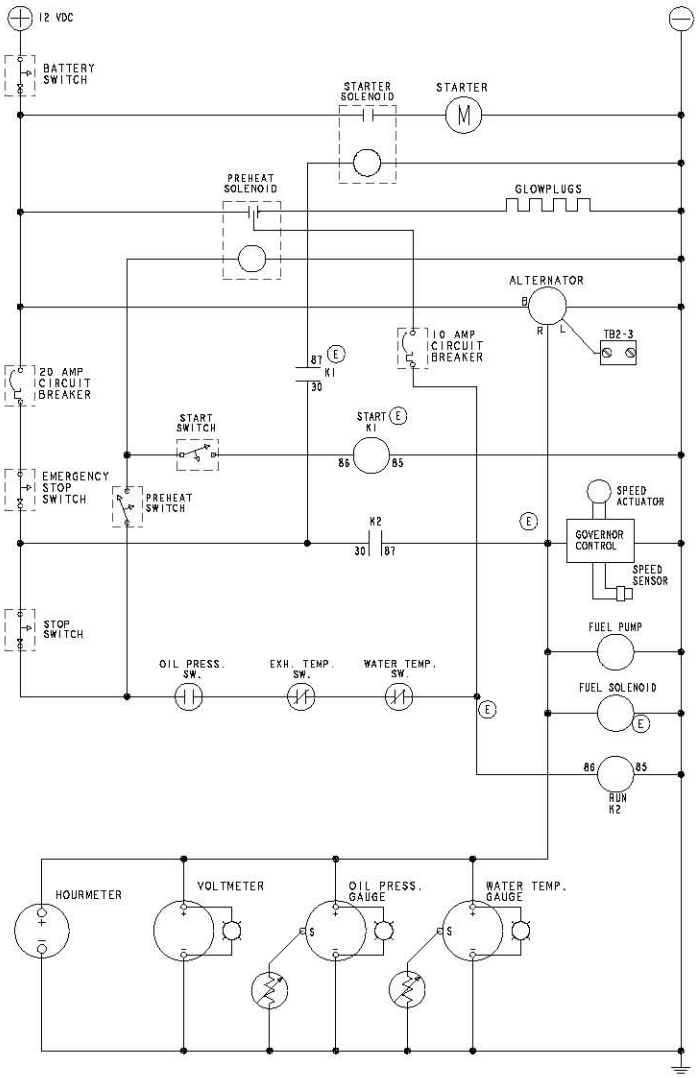

TOLERANCES	WESTERBEKE CORPORATION AYER MA. 02322
INCHES: .XX ±.03, .XXX ±.005, FRACT. ±.05, ANGLES ±.5°, FINISH 32	MILLIMETERS: .X ±.5, .XX ±.13
TITLE: WIRING DIAGRAM, 15.6 BTDA, 20, 25, 32 BED W/ELECTRONIC GOVERNING	
DRAWN BY: WRM	DATE: 8/7/2000
APPROVED BY	DATE
DIMENSIONS: INCHES / MILLIMETERS (UNLESS OTHERWISE SPECIFIED)	SCALE: NONE
SHT. 1 OF 1	SIZE: E
DRAWING NUMBER: 39422	REV. E